SUPRATECH

Behind-the-mirror stainless steel paper towel dispenser with bottom refill

Reference: **AS-096**



Description

Sheet-by-sheet stainless steel paper towel dispenser to be integrated behind-the-mirror, with angled slot for bottom dispensing.

Spring-loaded valves for bottom refill.

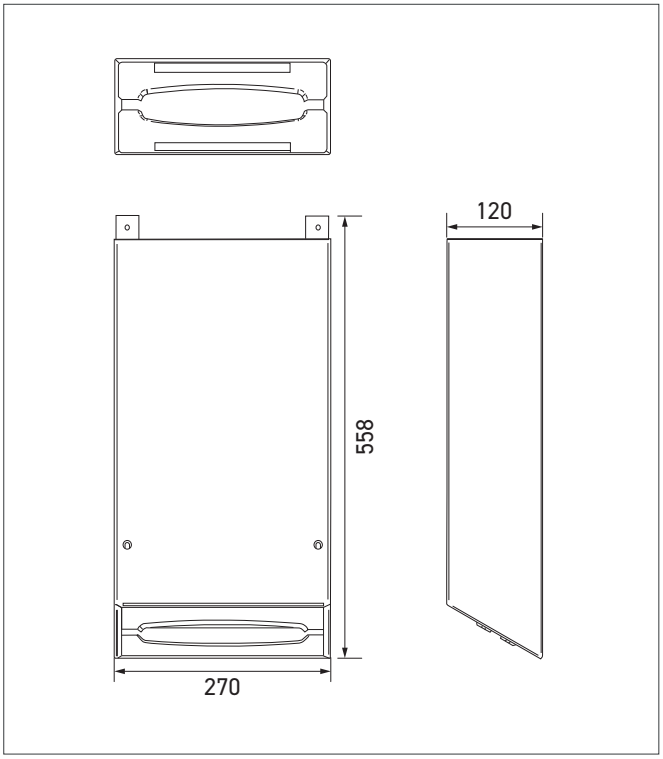

Features

AISI 304 stainless steel, brushed finish.

Capacity: 600 to 800 paper towels, depending on the format.

Installation height: aligned with the bottom of the mirror.

Fixings included.

Dimensions: W270 x H558 x D120 mm.

Weight: 2,4 kg.

10-year warranty.

Reference

Behind-the-mirror stainless steel paper towel dispenser

- **AS-096** **brushed finish**