Free flow or Click Clack stainless steel washbasin drain

Reference: **S-12**



Description

Free flow or Click Clack universal design drain, made in brushed stainless steel.

With central screw for vanity or washbasin mounting, with or without overflow.

1 drain = 2 functions

Click clack with push-to-open / push-to-close operation

or fixed dome for continuous water flow.

Simple and easy switching between the two functions:

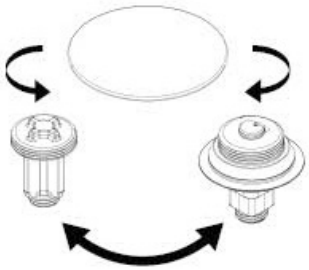

Features

Bacteriostatic AISI 304 stainless steel (principal body, lower body and screw, upper dome).

Finish: Brushed.

1 1/4" outlet.

Maximum bowl thickness: 70 mm.

Certified: NF

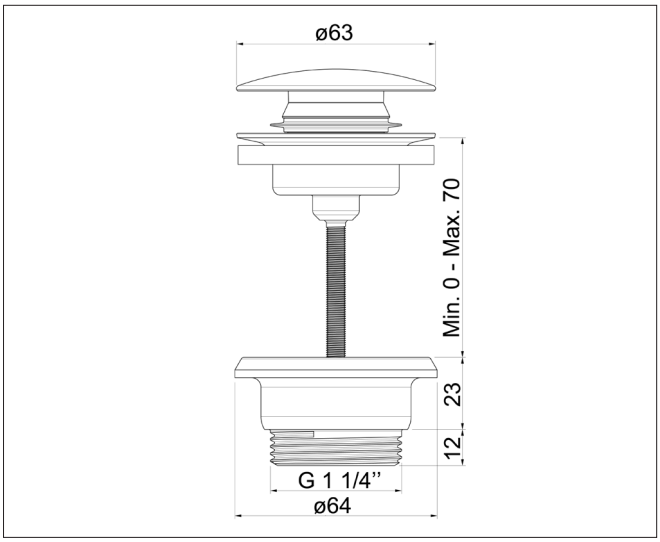

Reference

Washbasin drain

- **S-12 brushed stainless steel finish**

Option

- Overflow insert