SUPRATECH

Under-sink soap tank support cabinet for multi-feed kit

Reference : **RES-690 / RES-691**

Description

6L under-sink soap tank support cabinet, including a multi-feed kit to supply up to 6 touch-free soap dispensers (maximum distance: 3 m).
It conceals the system, protects against theft, and keeps the washroom space clean, organized, and visually appealing.
Made of HPL laminate with a white-finish door and oak-finish body.
Soap level monitoring slot.
Key lock.





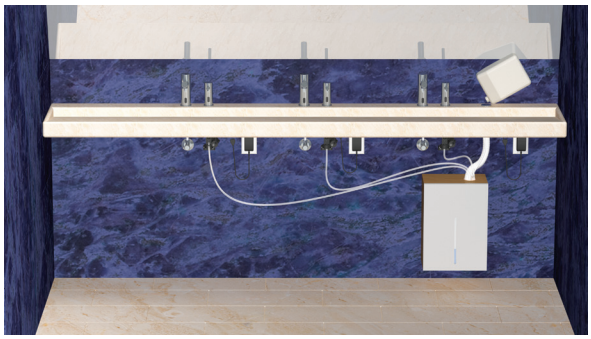

Top-filling version, theft-proof chrome-plated lid
Ref. RES-690



Bottom-filling version, directly into the tank
Ref. RES-691

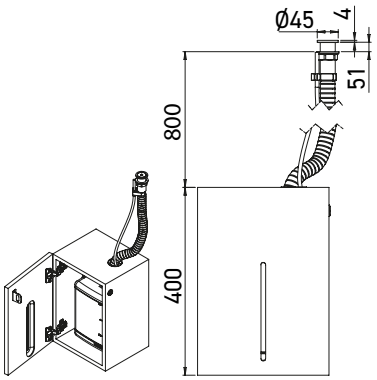

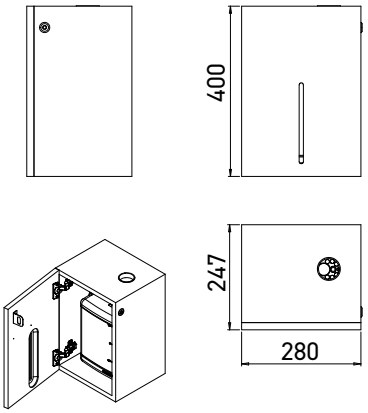

References model choices

Under-sink soap tank support cabinet for multi-feed kit

- **RES-690** **Under-sink cabinet with top-filling multi-feed kit**
- **RES-691** **Under-sink cabinet with bottom-filling multi-feed kit**