SUPRATECH

COMBINEO stainless steel floor-standing WC and washbasin unit with front fixing

Reference: **IN-3035**



Description

COMBINEO stainless steel WC-washbasin unit for front-panel mounting with access panel, comprising a central floor-standing WC pan, a ø 320 mm pressed washbasin, a backsplash with recessed push-button self-closing taps. The taps provide direct WC flush and anti-blockage cold or pre-mixed water supply to the washbasin, with anti-ligature stainless steel spout.

Specially designed for detention facilities requiring a high level of security and maximum utility in minimum space.

Features

Brushed AISI 304 stainless steel.

The combined unit is reinforced with high-density polyurethane foam to prevent noise and denting.

Floor-standing WC with minimum 4 L flush, welded to the body of the combined unit. Anti-splash pan, pressed in one piece with concealed rim, for easy maintenance, preventing concealment of substances and improved hygiene.
Backsplash H150 x D85 mm, with shelf use.
2 integrated push-button taps for washbasin and direct WC flush.
Rounded vandal-proof AISI 304 stainless steel spout with anti-rotation feature, concealed flow regulator.

Installation:

Washbasin: M1/2" threaded faucet.

Time-flow 10-20 seconds with anti-blocking cartridge.
Flow rate 6 L/min. Pressure 1.5-5 bar / recommended 3-4 bar.
Vandal-proof perforated 1 1/2" drain.

WC: M3/4" threaded faucet, flush pipe pre-connected to pan inlet Ø55 mm, with integrated Venturi system for an effective flush.

Time-flow 7-10 seconds / flush 4-8 L.

Ø100 mm trap with horizontal outlet. Rounded junction edge for easy connection.

Fixing: from the front with lateral access panel for connections and floor and wall fixing, locked by torx pin security screws or pop rivets.

Integrated earthing.

Dimensions: W360 x D900 x H1005 mm.

CE. Compliant with EN 997 and EN 33 (WC) + EN 14688 (washbasin) + EN 816 and EN 1112 (water regulations).

10-year warranty.

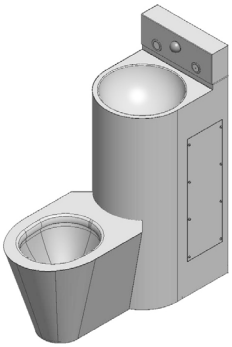

Front mounting with lateral access panel

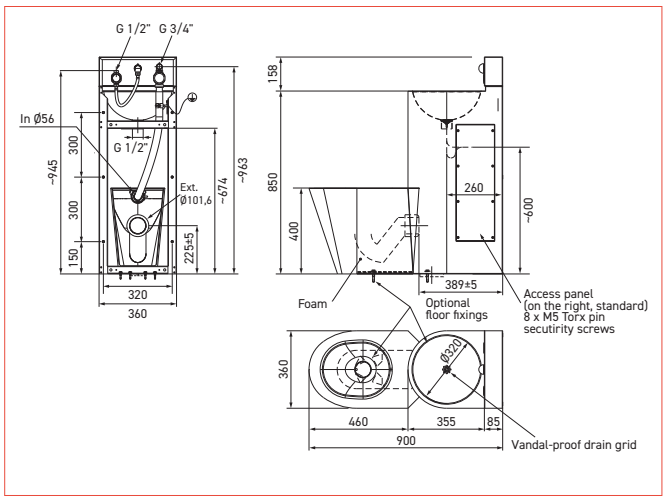

Reference

Floor-mounted WC-washbasin combination with front fixing

- **IN-3035** **centrally positioned WC version**

Options

- Second hot water push-button tap for washbasin ref. ...-CF
- 6L tank flush ref. ...-R
- Integrated toilet roll holder
- Horizontal stainless steel waste pipe for washbasin
- Without backsplash, without water spout, piezo touch controls or remote controls