OVA single stainless steel coat hook

Reference: **AM-15-S**



Description

OVA single wall-mounted stainless steel coat hook offering excellent resistance and durability.

Easy to install.

Elegant and functional design with a stable base, facilitates the hanging of clothes and other accessories in public sanitary spaces.

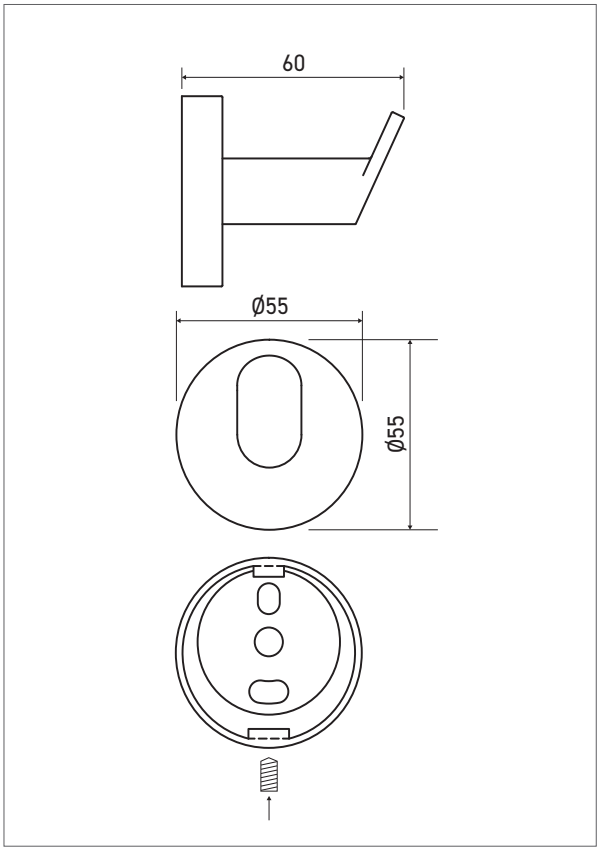

Features

Single AISI 304 stainless steel coat hook, brushed finish.

Concealed wall fixing (screws and plugs provided).

Secured by Allen screw concealed beneath the hook.

Dimensions: Ø55 x D60 mm.

10-year warranty.

Reference

Single OVA coat hook

- **AM-15-S** **brushed stainless steel finish**