Stainless steel hook with rubber door bumper

Reference: **AM-62**



Description

Wall-mounted stainless steel hook, 2 in 1 with built-in door bumper.

Designed for public washrooms, hotels and communal facilities, its 2-in-1 design combines a door stop with a rubber bumper, to effectively protect doors and walls from impacts.

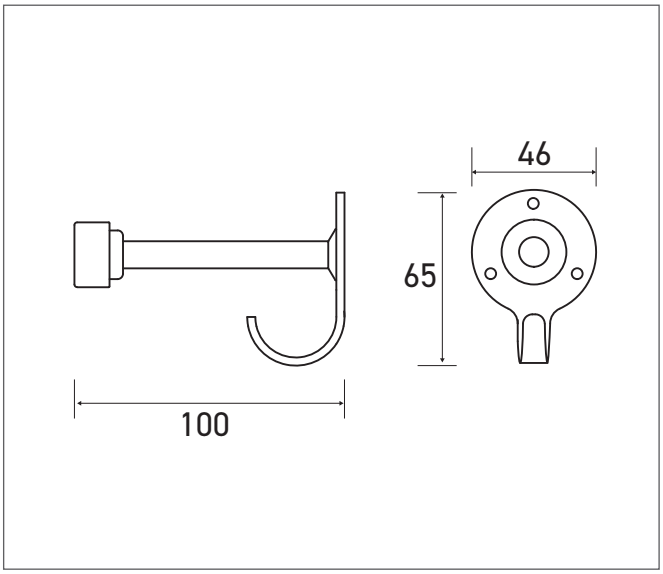

Features

AISI 304 stainless steel, brushed finish.

3 fixing points.

Rubber shock-absorbing pad.

Dimensions: W46 x D100 x H65 mm.

5-year warranty.

Reference

Single stainless steel hook with door bumper

- **AM-62** **brushed stainless steel finish**