ELO stainless steel hook with door bumper

Reference: **AM-66**



Description

ELO single stainless steel hook, 2-in-1 with built-in door bumper.

Its minimalist and functional design, combined with concealed fixings, ensures a sleek finish and perfect integration into all sanitary facilities. Its robust base provides a sturdy hook for hanging clothes and other belongings, while also incorporating a door bumper.

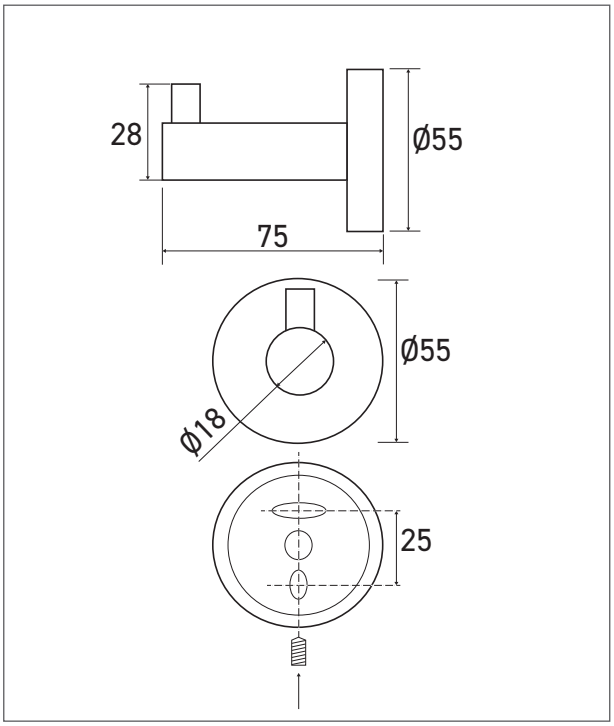

Features

AISI 304 stainless steel, brushed finish.

Central stainless steel shaft Ø 18 x L75 mm.
Stainless steel rosette to conceal fixings Ø 55 mm.

Rubber shock-absorbing pad.

Dimensions: Ø55 x P75 mm.

5-year warranty.

Reference

ELO stainless steel hook with door bumper

- **AM-66** **brushed finish**