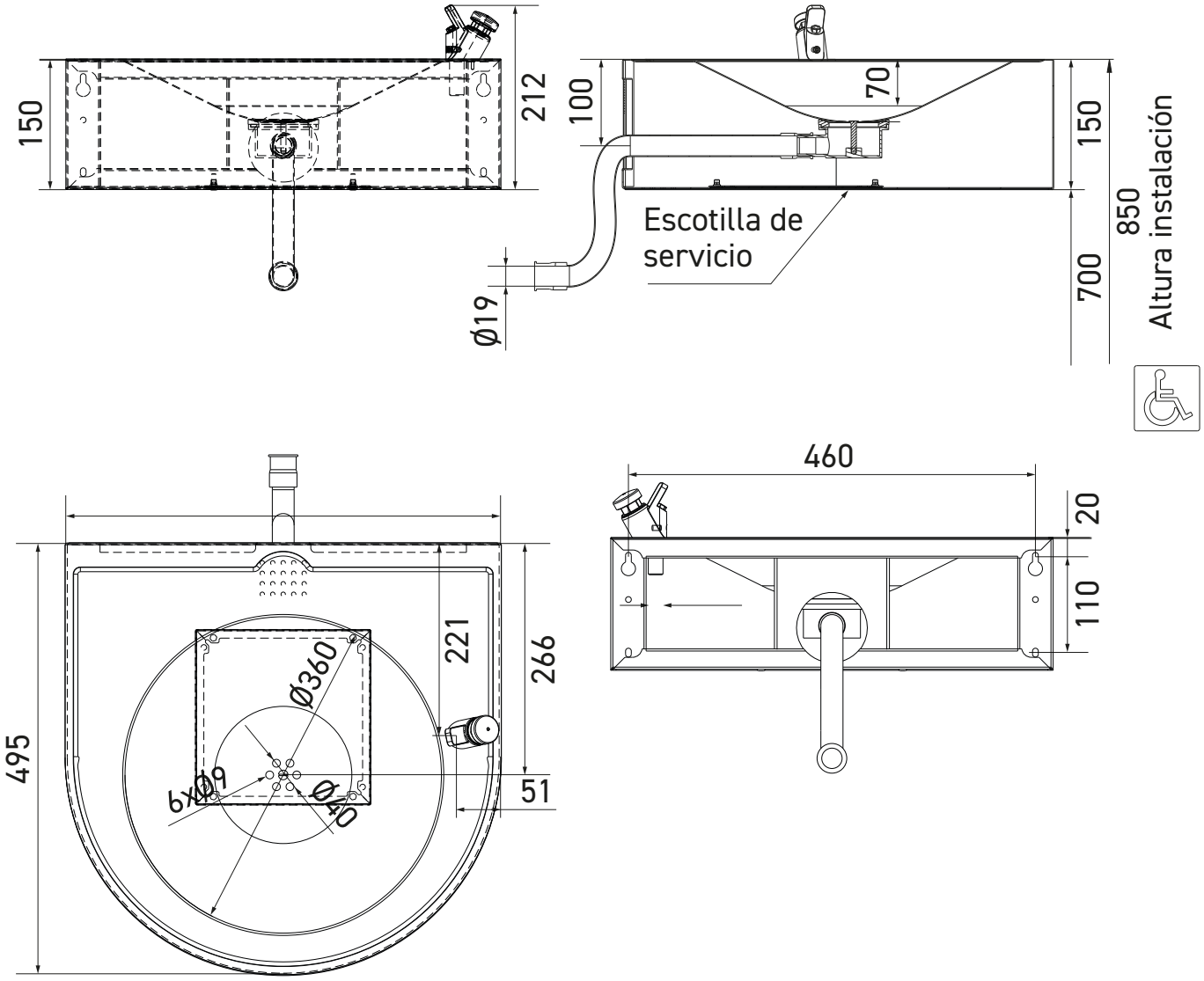

Ref. FB-006-T

SUPRATECH