SUPRATECH

LIDOX vandal-resistant stainless steel corner washbasin

Reference: **LM-014**

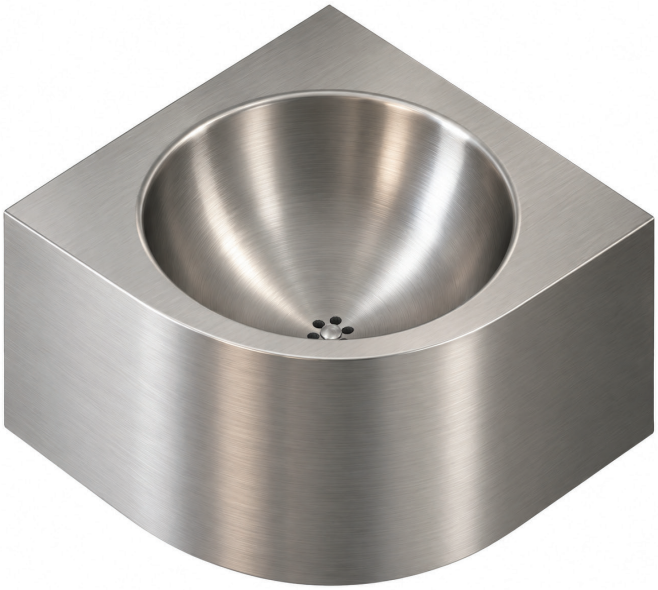

Description

LIDOX wall-mounted corner washbasin, in stainless steel, featuring a fully enclosed housing with a service duct to conceal and protect plumbing connections.

Its rounded design reduces the risk of injury and makes cleaning easier.

Robust, attractive and durable, this vandal-resistant washbasin is particularly suitable for high-traffic public restrooms as for locations requiring secure, tamper-resistant equipment.

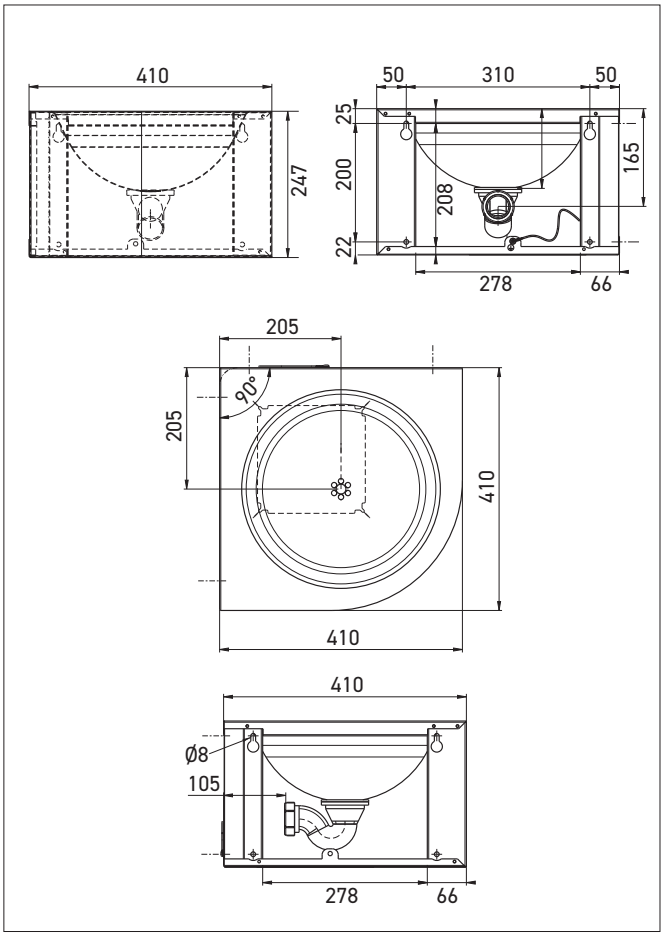

Features

AISI 304 stainless steel quality, brushed finish,
1 / 1,2 / 1,5 mm thickness.

Bowl Ø 320 x H135 mm. Without overflow.

Tamper-proof perforated drain with waste trap included.

Concealed evacuation 1 1/2" Ø 40 mm.
Wall-mounted (left or right corner).

Service duct with security Torx screw.

Integrated earthing.

Dimensions: W410 x D410 x H247 mm.

Compliant with EN 14688.
10-year warranty.

Reference

LIDOX vandal-resistant stainless steel corner washbasin

- **LM-014** **brushed finish**

Option

- Tap hole Ø 22 mm (Ref. : ...-T2)
  or 35 mm (Ref. : ...-T1)